BlueControl Poultry

Climate and Production Controller

Technical Info

Your partner for service

LAE Anlagenbau GmbH

Altenwalder Chaussee 94-100
D - 27472 Cuxhaven
GERMANY

TEL: +49 4721 105 0
FAX : + 49 4721 105 210
info@lae-cuxhaven.de
www.lae-cuxhaven.de

TI • 2026-06-26

Software version 9.4

1 Product description 4

1.1 Climate control 4
1.1.1 LPV (Low Power Ventilation) poultry 5
1.1.2 Tunnel 6
1.1.3 Combi-Tunnel 7
1.1.4 Natural ventilation 8

1.2 Production control 10
1.2.1 BlueControl poultry for broilers 10
1.2.2 BlueControl poultry for breeders 11
1.2.3 BlueControl poultry for layers 12

1.3 Functionality poultry 13

1.4 Functionality Mini Poultry 19

2 Product survey 23

2.1 Hardware 23

2.2 Software 25
2.2.1 Feature software 26

2.3 Hardware and software 28

2.4 Language 28

2.5 Accessories 30

3 Technical data 40

3.1 Dimensioned sketch 41

3.2 Minimum requirements with shared equipment 42

3.3 Minimum requirements for a management system 43

1 Product description

BlueControl poultry is a series of one-house controllers specifically designed for poultry houses. The controller series includes several variants. Each of them meets the different requirements for climate and production control in each type of production and geographical, climatic conditions.

Climate

BlueControl poultry is available in the following climate variants:

- LPV
- Tunnel
- Combi-Tunnel
- Natural

Production

All BlueControl climate variants is available with standard broiler production functionality.

In addition, the following production variants are available as add-on or stand-alone.

Add-on (used together with a climate variant)

- Broiler (broiler)
- Layer-L (layers)
- Layer-M (layers)

Add-on (used together with a climate variant) or stand-alone (production functionality only)

- Breeder (parent stock)

BlueControl Mini

BlueControl Mini is a 1-zone variant with very limited climate and production control for broilers. BlueControl Mini is supplied with a 7” display and pre-installed software for LPV, Tunnel, or Natural ventilation. The desired climate variant, including the choice between broilers/pigs is selected at the startup of the controller.

The controller is operated via a large touch display with graphical views of the ventilation status, icons and, curves, among other things. The pages shown on the display are adapted to the different variants, where the most relevant functions are easily accessible. A wide range of functions, such as 24-hour clock, light, water meter, and auxiliary sensor, can be named by the user to suit the individual house, and functions can be easily recognized in menus and alarms.

The software can be freely combined with the associated hardware.

BlueControl poultry variants are available in combination of the following hardware:

- 12, 22 or 32 relays
- Large or small box
- With or without fan speed controller

The BlueControl poultry can be pre-assembled in a cabinet or for mounting in a wiring box.

1.1 Climate control

The controller regulates according to a comprehensive set of climate curves and adjusts the ventilation according to the age of the birds. Each of the 4 climate variants (LPV, Combi-Tunnel and Tunnel and Natural) are accommodated to the special demands made on the ventilation in different climatic zones.

The controller improves the coherence between the humidity and temperature control in the livestock house. The method is based on heating and ventilation as the crucial regulation parameters but the result is a soft and smooth regulation. The present climate is thus currently being optimized by using the collected historical data.

1.1.1 LPV (Low Power Ventilation) poultry

The LPV variant is a classic controller that can handle both negative pressure and equal pressure. The system can be suited for most houses. The system is designed for the temperate parts of the world. Fresh air is supplied to the house by means of either wall, ceiling or roof inlets, and the climate is regulated by adjusting the air volume supplied to the house, among other things.

LPV ventilation works according to the mixing principle. Fresh air from the inlets is mixed with the housing air before it is extracted through the exhaust units in the roof or wall.

- Fresh air at low outside temperature (Minimum ventilation)
- Cooling at high outside temperatures (Extra ventilation)

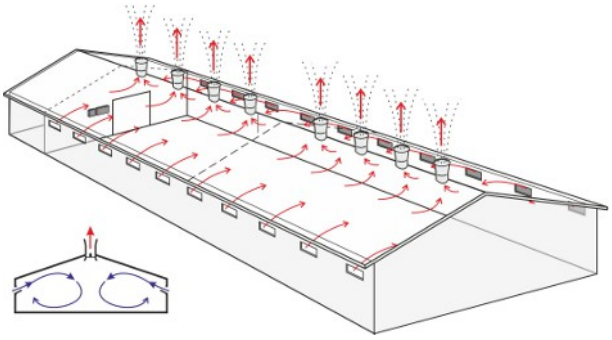

Air intake: Inlets positioned in outer wall or ceiling.

Air outlet: Exhaust units positioned in the roof or wall.

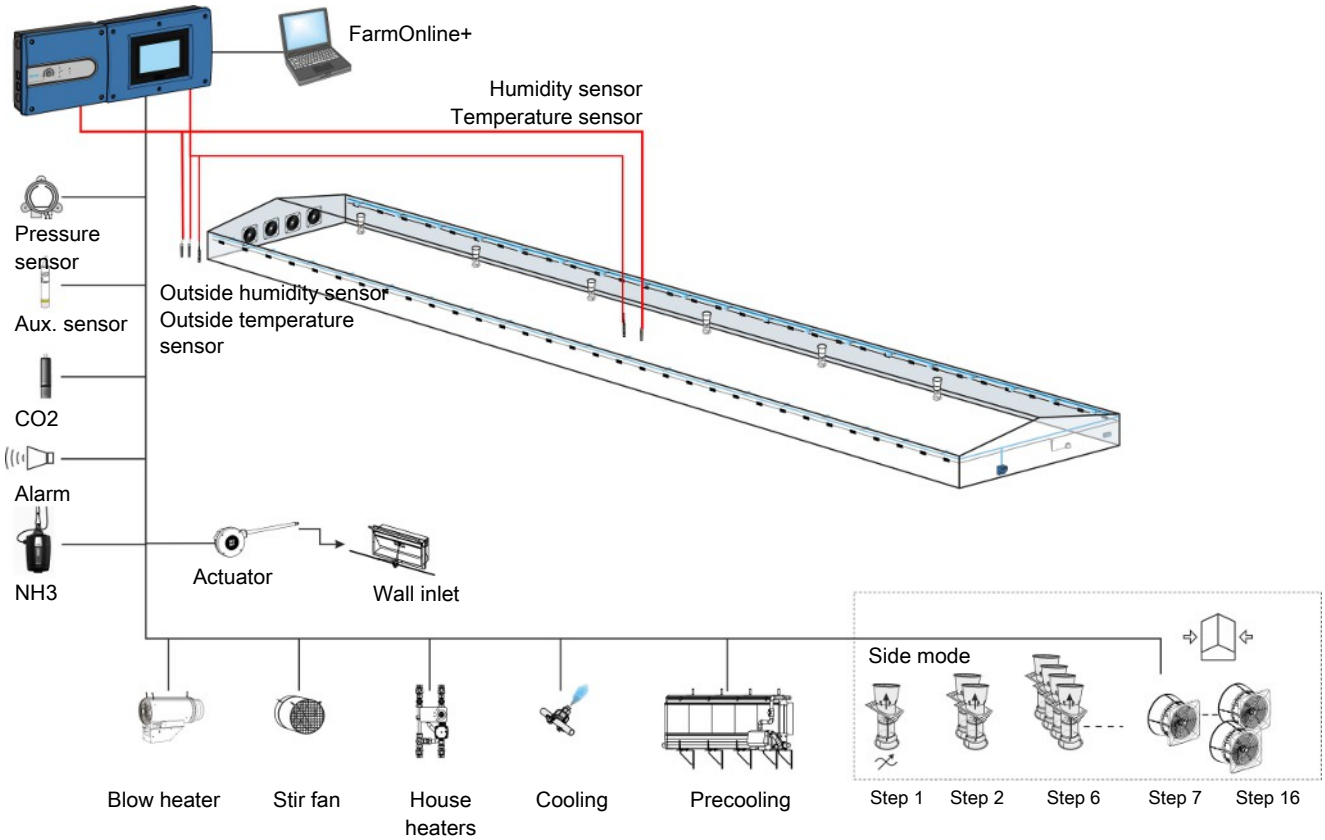

Figure 1: Examples of connections in an LPV house

1.1.2 Tunnel

The T variant has been designed for application in houses in parts of the world, where it is constantly hot. In order to achieve a cooling effect for the animals, an air current is created lengthwise in the house. In other words, the air speed cools the animals, and the higher the speed, the lower is the temperature perceived by the animals.

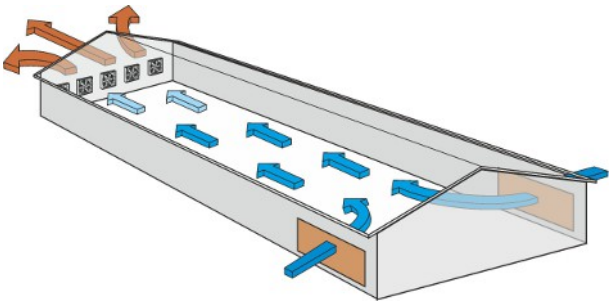

Air intake: Tunnel opening with cooling pads

Air outlet: Wall Fans

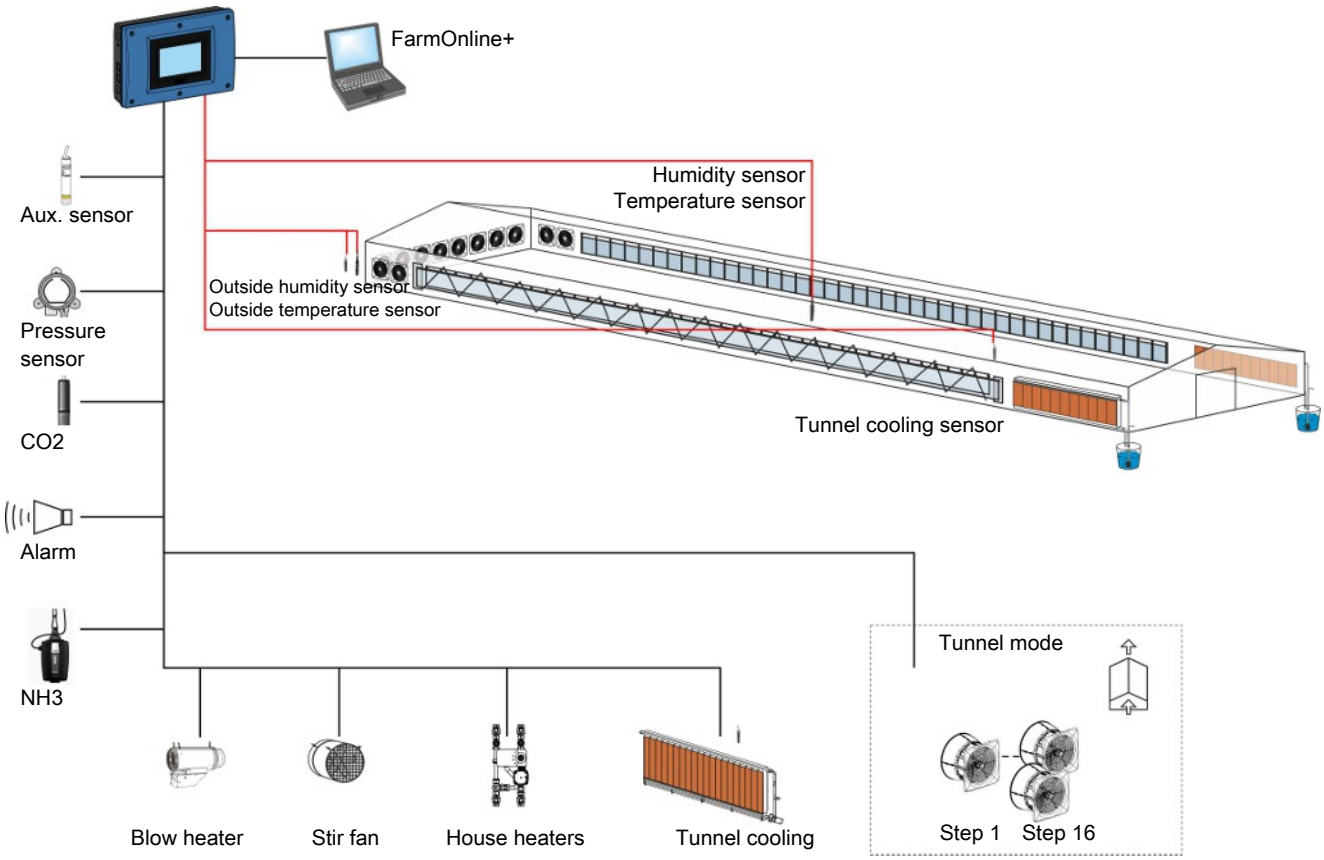

Figure 2: Examples of connections in a Tunnel house

1.1.3 Combi-Tunnel

The CT variant is a low pressure system designed for climatic zones with daily and seasonal temperature fluctuations. It combines the LPV and Tunnel systems, in order to ensure optimal growth conditions for the animals even at very high outdoor temperatures.

The combination of side and tunnel ventilation provides:

- side mode ventilation at low outside temperature.
- tunnel mode ventilation at high outside temperature.

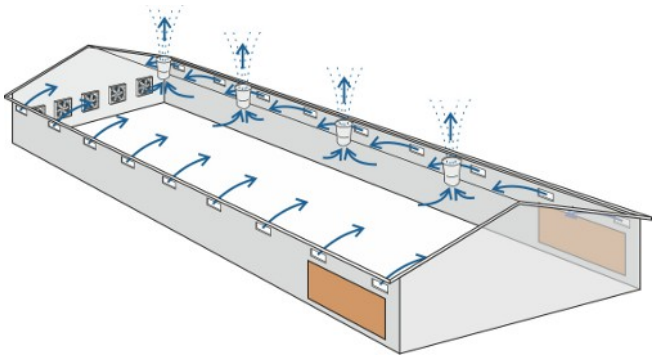

Side mode

Air intake: Inlets positioned in outer wall or ceiling.

Air outlet: Exhaust units positioned in the roof or wall.

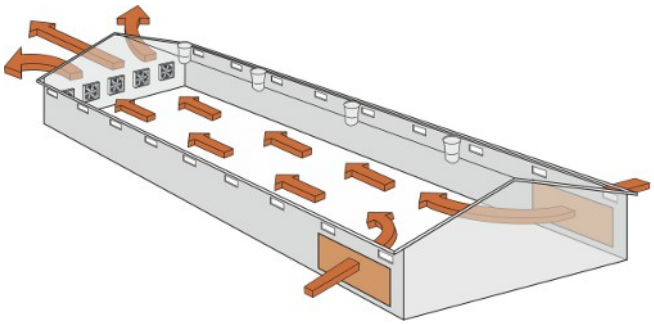

Tunnel mode

Air intake: Tunnel opening with cooling pads or side cooling.

Air outlet: Wall fans.

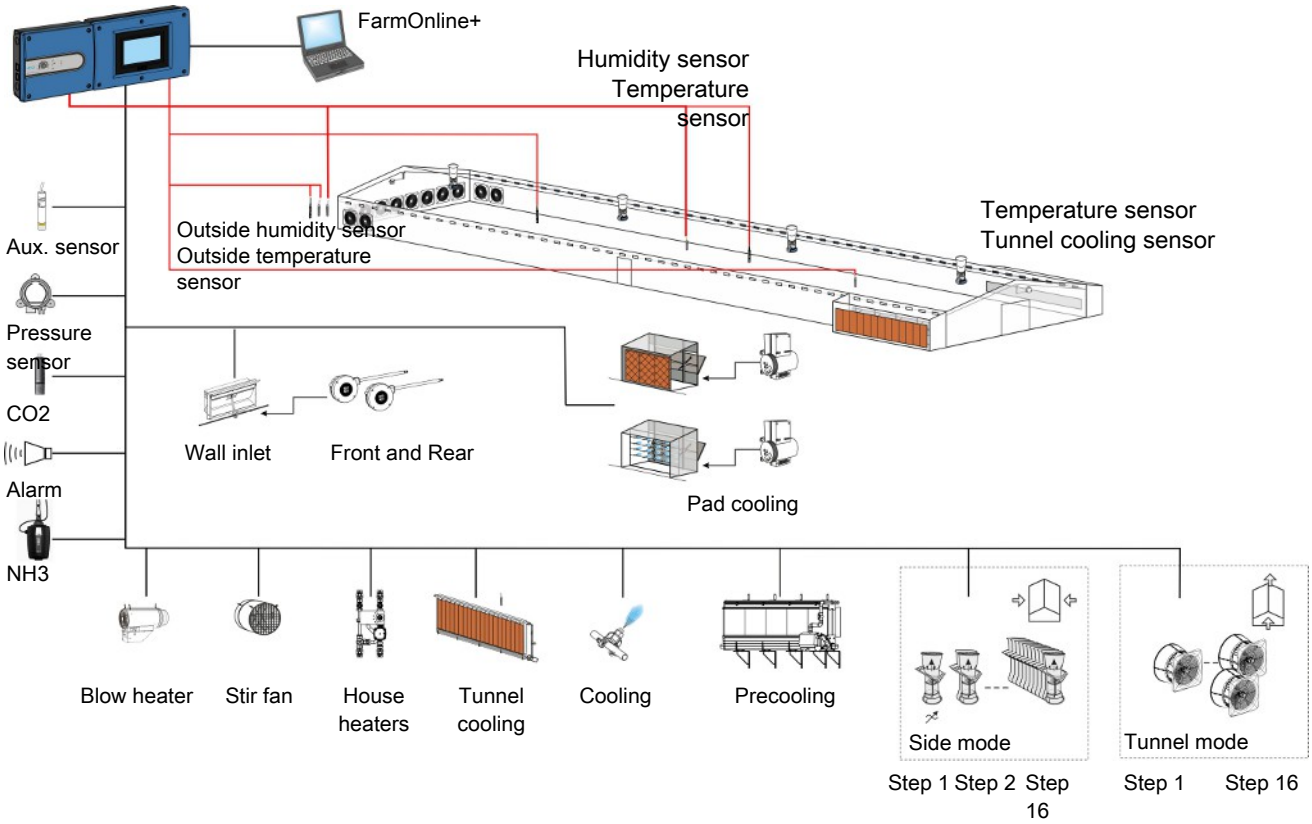

Figure 3: Example of connections in a Combi-Tunnel house

1.1.4 Natural ventilation

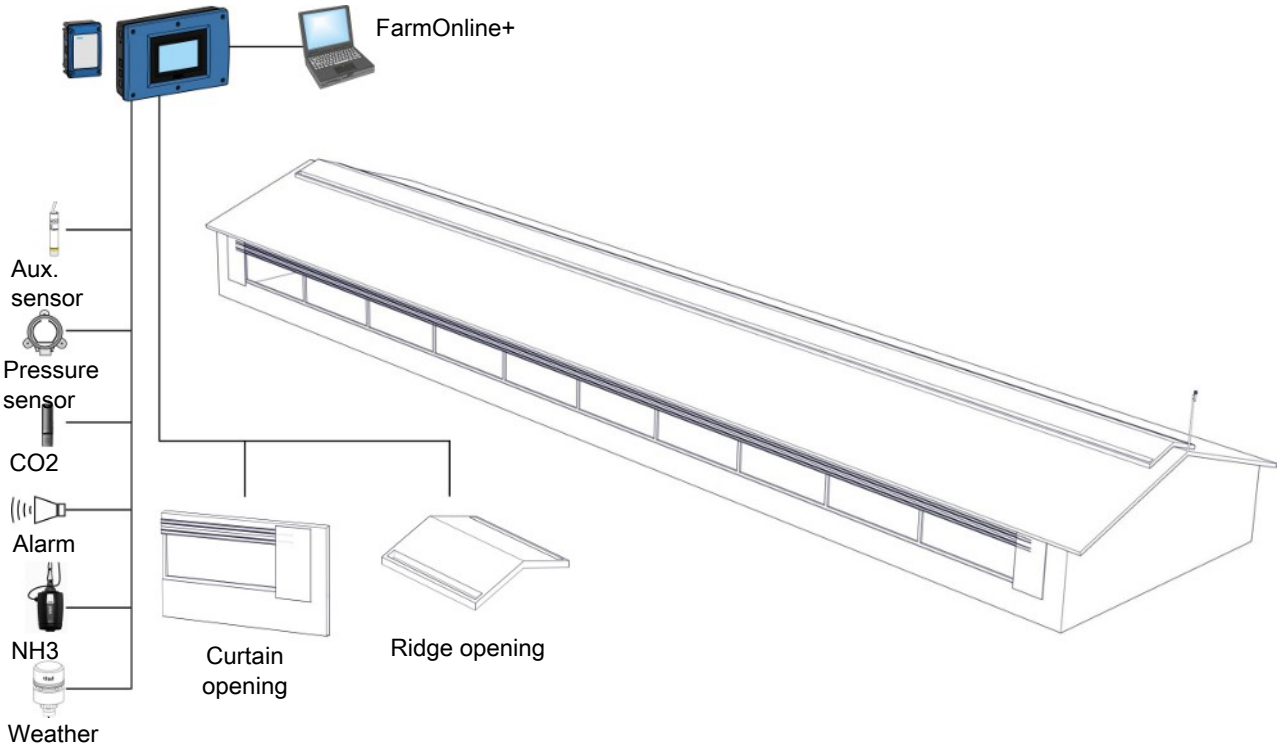

Figure 4: Example of connections in a house with natural ventilation

Pure natural ventilation

Using natural ventilation, the air change takes place when air currents move between the adjustable air intake and the air outlet without any assistance of fans. Curtain openings on the sides of the livestock house are typically used as both air intake and the air outlet. You can also use tunnel opening, open flap in exhaust unit or ridge opening as air outlet. The mechanical regulation is solely opening and closing of the inlets and outlets. Since no exhaustion takes place by means of fans, an energy saving is achieved and the noise level in the livestock house is reduced.

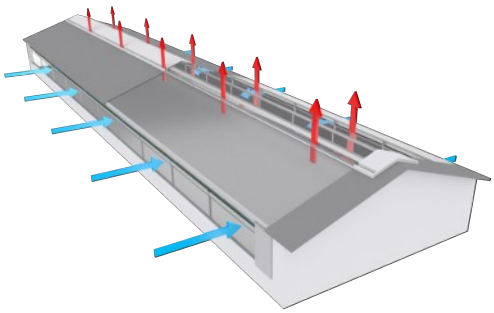

Figure 5: Example of a naturally ventilated livestock house with curtain openings on the sides of the house and ridge opening in the roof

Natural ventilation in combination

Natural ventilation can be combined with other ventilation principles (LPV, Tunnel, and heat recovery) depending on how the ventilation system is constructed. When the required climate can no longer be sustained using natural ventilation, the ventilation system switches to a different ventilation principle, for instance on the basis of too high or low outside temperature, too high CO2 level in the livestock house or too high wind velocities.

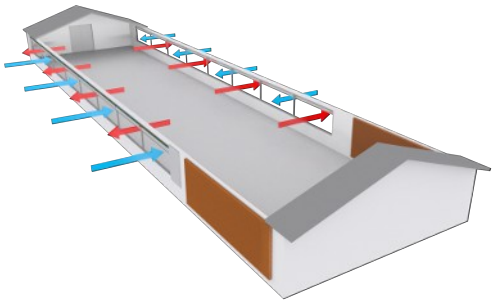

Figure 6: Example of naturally ventilated livestock house in combination with tunnel ventilation. Natural ventilation

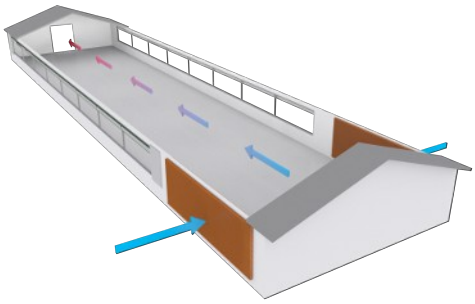

Figure 7: Example of naturally ventilated livestock house in combination with tunnel ventilation. Tunnel ventilation

1.2 Production control

BlueControl poultry is available with standard broiler production functionality.

Additional production functionality is available as add-on production software adapted to broilers, breeders or layers respectively. See details in the survey in section Functionality poultry [▸ 13].

1.2.1 BlueControl poultry for broilers

BlueControl poultry for broilers receives and records data about the animals' weight and water and feed consumption and uses this to calculate key figures for e.g. gain and distribution of weight. Feeding is controlled by an advanced program that can distribute up to five different feed components. The program records provided amount of feed and generates an alarm if a silo reaches its minimum level.

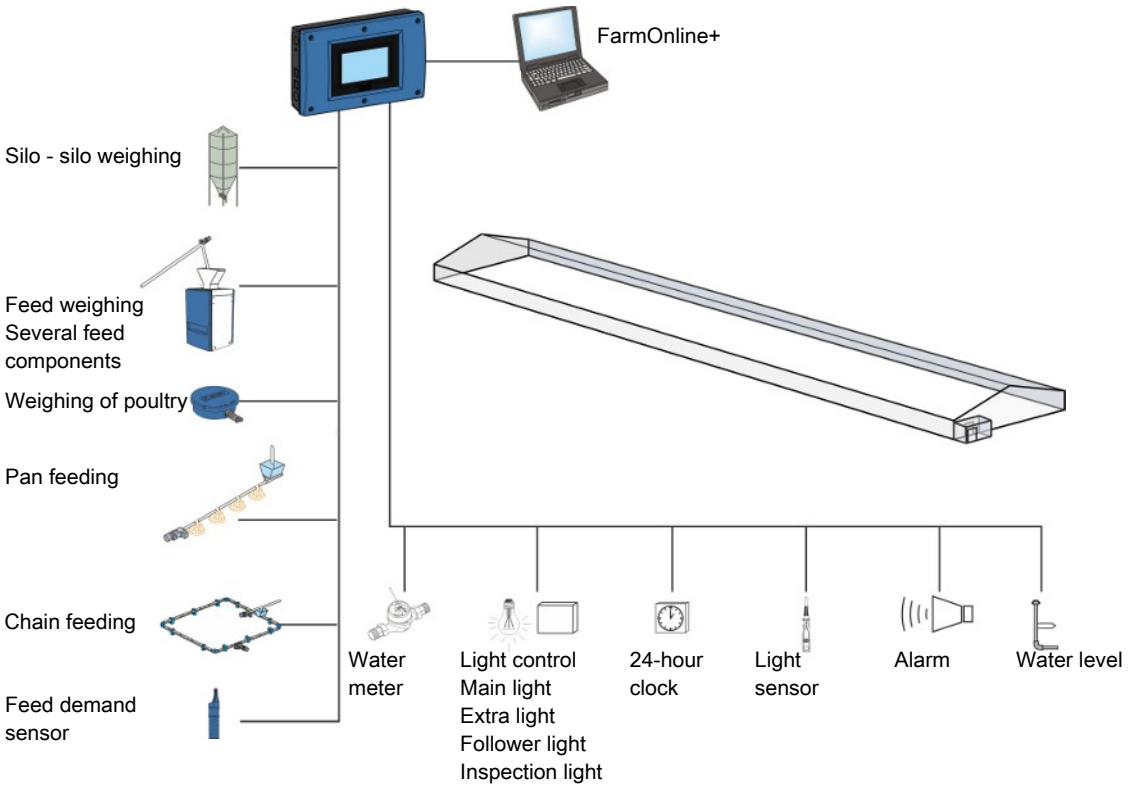

Figure 8: Example of connections in a broiler house.

1.2.2 BlueControl poultry for breeders

BlueControl poultry for breeders is available with destination feeding and egg counters.

BlueControl poultry for breeders can weigh out and supply feed in feed lines integrating up to 64 feeding destinations. Filling and feeding procedures take place in accordance with the timer control, and different time programs can be made based on the age of the animals. The amount of feed can be set and adjusted manually or can be run on a schedule according to the required amount of feed per female and male respectively. The feed can be supplied from up to 5 silos and the feed can be mixed prior to feeding.

During egg laying, the produced eggs are automatically recorded by one or more electronic egg counters. It is also possible to record floor eggs, system eggs and nest eggs. The produced eggs can be entered manually if automatic egg counters have not been installed.

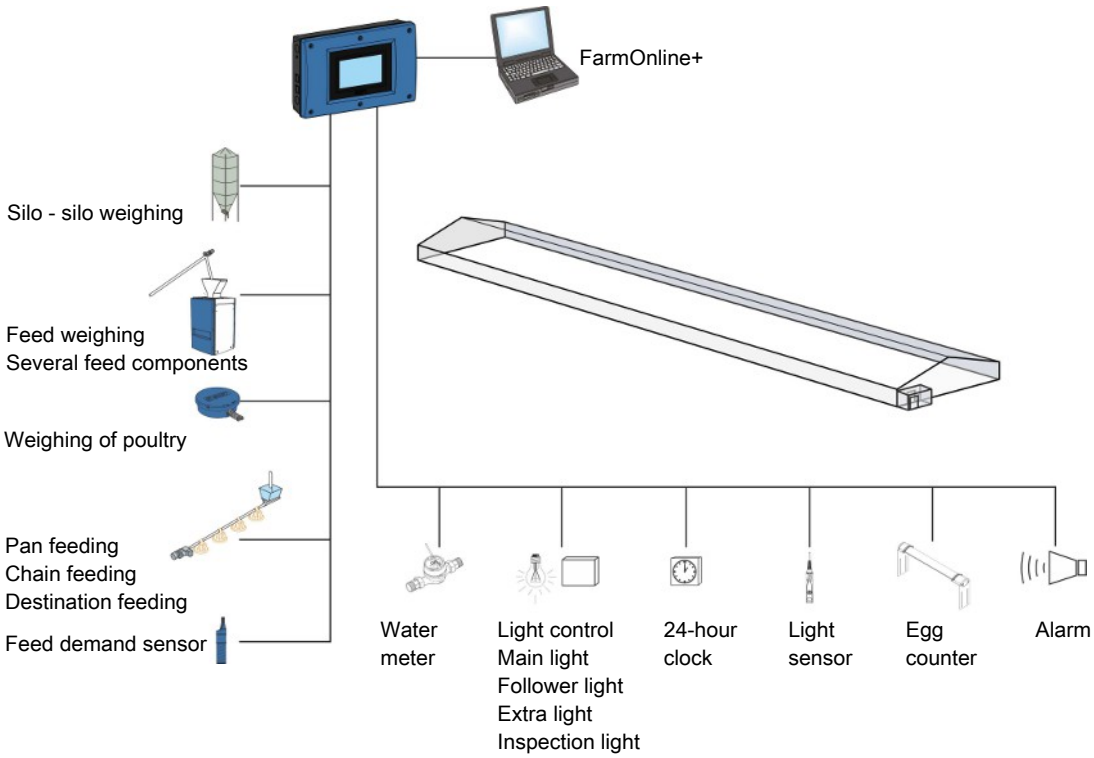

Figure 9: Example of connections in a breeder house.

1.2.3 BlueControl poultry for layers

BlueControl poultry for layers supports both cage and aviary feeding.

For cage systems, the number of rows and the number of tiers in each row are selected. For aviary systems the number of rooms are selected. The layer controller can weigh out and supply feed in feed lines integrating up to 12 feeding groups. One group is fed at a time. Filling and feeding procedures take place in accordance with the timer control, and different time programs can be made based on the age of the animals. The feed can be supplied from up to 5 silos and the feed can be mixed prior to feeding.

During egg laying, the produced eggs are automatically recorded by one or more electronic egg counters. It is also possible to record floor eggs eggs and system eggs. The produced eggs can be entered manually if automatic egg counters have not been installed. The climate controller shows several key figures for egg production, and you can also enter egg size and the weight of eggs.

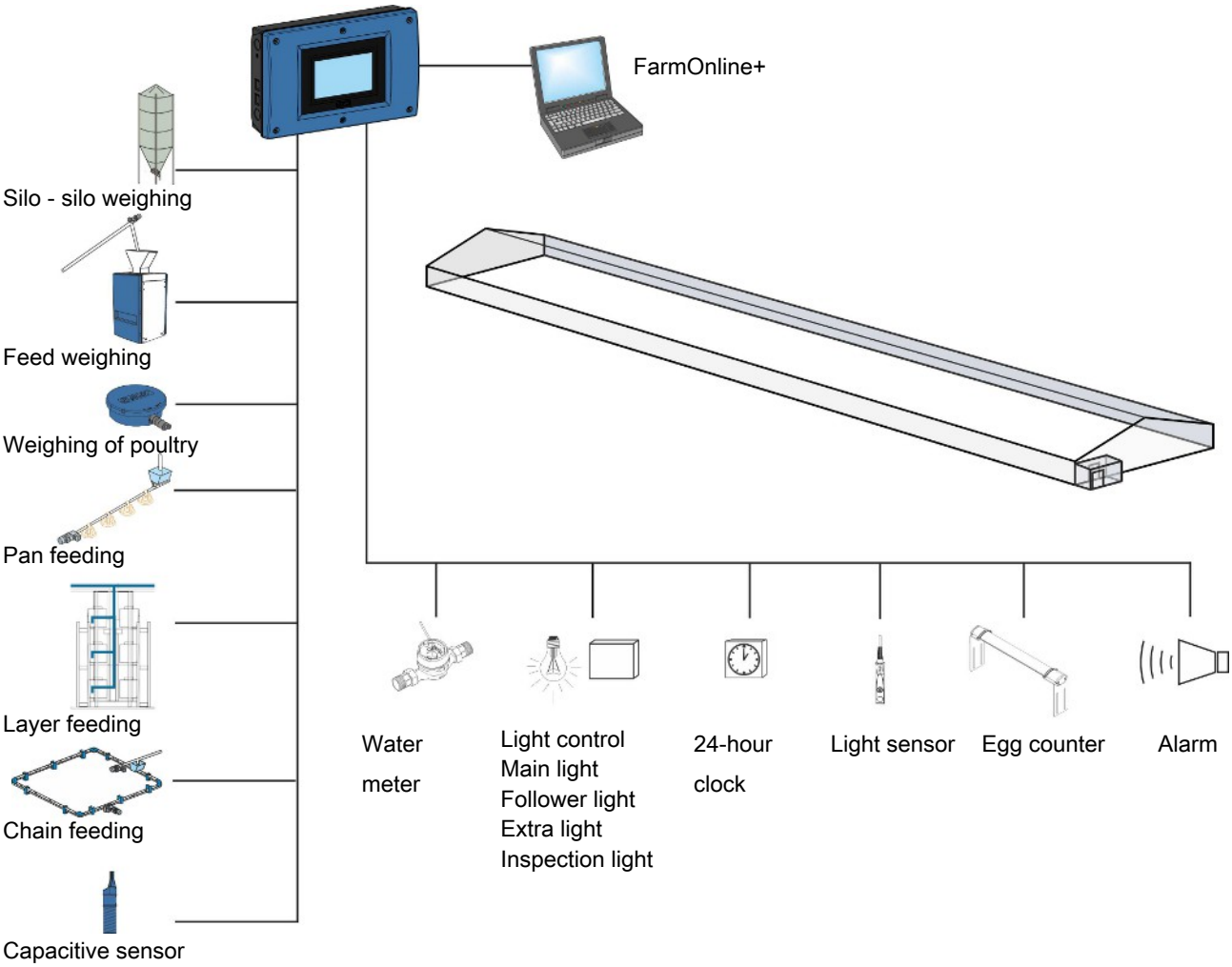

Figure 10: Example of connections in a layer house.

1.3 Functionality poultry

	BlueControl system software					BlueControl add-on software			
Software variant	**LPV**	**CT**	**T**	**Nat.**	**Breeder**	**Broiler**	**Breeder**	**Layer M**	**Layer L**
Ventilation systems									
LPV	X	X							
LPV chill	X	X							
Tunnel		X	X						
Tunnel-Plus		X							
Soft chill	X	X							
Combi-Tunnel (side + tunnel)		X							
Natural	X	X	X	X					
Ventilation and temperature									
Inside temperature sensor	8	8	8	8					12
Outside temperature sensor	X	X	X	X					
2-zone	X	X		X					
Dynamic Air	X	X							
MultiStep	X	X	X						
Dynamic MultiStep (side and tunnel)	X	X	X						
Side MultiStep	16	16							
Tunnel MultiStep		16	16						
Adaptive ventilation	X	X	X	X					
PID control (or P-band)	X	X	X	X					
Minimum ventilation in % and m^3/animal	X	X	X	X					
Reduced minimum ventilation (according to outside temp.)	X	X	X	X					
Number of stepless groups controlled separately	2	2	2						
Number of flaps in each stepless group	1	1	1						
Parking of fans	X	X							
Cycle timer minimum side ventilation	X	X							
Cycle timer minimum tunnel ventilation		X	X						
Active pressure control - inlets	X	X							
Comfort control	X	X							
Heat wave comfort control (batch production)	X	X							
Day and night adjustment	X	X	X	X					
De-ice function for inlets	X	X							
Zone controlled inlets	X	X							

	BlueControl system software					BlueControl add-on software			
Software variant	**LPV**	**CT**	**T**	**Nat.**	**Breeder**	**Broiler**	**Breeder**	**Layer M**	**Layer L**
Shared air outlets (between side and tunnel)		X							
Extra ventilation (**CT-variant in side-mode)	X	X*							
CO2 minimum ventilation control	X	X	X						
NH3 ventilation	X	X	X						
Stir fan	4	4	4	4					
Heat recovery unit (only 1 zone houses)	2	2							
FreeRange	X	X							
Pop holes	8	8							
Winter garden	2	2							
Display of user offset for temperature setpoint	X	X	X	X					
Heating									
House heaters									
Number of units	6	6	6	6					
SmartHeat units (0-10V heating)	6	6	6	6					
Adaptive control	X	X	X	X					
Stand-alone heater									
Number of units	4	4	4	4					
Adaptive control	X	X	X	X					
Floor heating									
Number of units	4	4		4					
SmartHeat unit (0-10 V floor heating)	X	X	X	X					
Control of floor heating (by outside temperature)	X	X	X	X					
Display of floor heating return temperature (relay floor heating	X	X	X	X					
Adaptive control	X	X	X	X					
Humidity									
Inside humidity sensor	X	X	X	X					
Outside humidity sensor	X	X	X	X					
Humidity control via "humidity ventilation”	X	X	X						
Humidity control via “temperature reduction”	X	X	X	X					
Humidity control via "heating control”	X	X	X	X					
Humidification control	X	X	X	X					
Adaptive humidity control	X	X	X	X					

	BlueControl system software					BlueControl add-on software			
Software variant	**LPV**	**CT**	**T**	**Nat.**	**Breeder**	**Broiler**	**Breeder**	**Layer M**	**Layer L**
Intelligent humidity control by outdoor conditions	X	X	X	X					
Automatic change of humidity control principle on day number	X	X	X	X					
Cooling									
Side cooling	3	3		3					
Precooling	X	X							
Tunnel cooling		6	6						
Adaptive tunnel cooling		X	X						
Cooling before maximum ventilation	X	X	X	X					
Cooling pad cleaning function		X	X						
Nozzle cleaning (side cooling)	X	X							
Use effect curve		X	X						
Production									
Animal groups					10	1	10	8	8
Feed									
See table for feed weighers available for different feed systems.									
Drum weigher (DOL 99B):	1	1	1	1	1				
- shared feed weigher	X	X	X	X	X				
- feed mixing					2	1	2	2	2
- number of feed components					5	5	5	5	5
Weigher 9940:	1	1	1	1	1				
- shared feed weigher	X	X	X	X	X				
- feed mixing					2	1	2	2	2
- number of feed components					5	5	5	5	5
Tip weigher	1	1	1	1	1				
Electronic silo weigher	2	2	2	2	2				4
Electronic silo weigher common auger	2	2	2	2	2				4
Day silo weigher (with destination feeding and layer feeding)	1	1	1	1	1				
Day silo with mixer								X	X
Time-controlled weigher	1	1	1	1	1				
Time-controlled weigher with cross auger	1	1	1	1	1				
Manual entry	X	X	X	X	X				
Feed counter	X	X	X	X	X				
Silos	2	2	2	2	5	5	5	4	8

	BlueControl system software					BlueControl add-on software			
Software variant	**LPV**	**CT**	**T**	**Nat.**	**Breeder**	**Broiler**	**Breeder**	**Layer M**	**Layer L**
Naming of silos	X	X	X	X	X				
Shared silo via LAN	X	X	X	X	X				
BinTrac feature software (silo weighing)	X	X	X	X	X				
Feed control									
Pan feeding	X	X	X	X	X				
Cross augers	1	1	1	1	1	2			
Chain feeding	X	X	X	X	X				
Destination feeding					X		X		
Number of destinations					64		64		
Week program					X		X		
Pause in case of input from external device					X		X		
Refilling (small destinations)					X		X		
Feed separation shutter (female/male)					X		X		
Raising of feed line (females and males)					X		X		
Layer feeding								X	X
Compartments (aviary)								6	8
Feeding groups (aviary)								4	12
Rows (cage)								6	12
Tiers (cage)								6	12
Feeding groups (cage)								6	12
Feed line								6	12
Adaptive feeding								X	X
Pause in case of input from external device								X	X
Animate feeding								X	X
Split feeding								X	X
Dosing hopper								X	X
Add feed manually								X	X
Feed supplement								X	X
Feed mixture according to graph					X	X	X	X	X
Naming of feed types	X	X	X	X	X				
Automatic silo change to silo with different feed type					X	X	X	X	X
Automatic silo change to silo with the same feed type	X	X	X	X	X				
Combined feed weigher and silo weigher					X	X	X	X	X
Shared silo content with other houses					X	X	X	X	X
Empty silo sensor	X	X	X	X	X				

	BlueControl system software					BlueControl add-on software			
Software variant	**LPV**	**CT**	**T**	**Nat.**	**Breeder**	**Broiler**	**Breeder**	**Layer M**	**Layer L**
Control according to light program	X	X	X	X	X				
Water									
Water meter	6	6	6	6	24	24	24	8	24
Naming of water meter	X	X	X	X	X				
Water program	X	X	X	X	X				
Control according to light program	X	X	X	X	X				
Stop relay for water consumption	X	X	X	X	X				
Leakage control	X	X	X	X	X				
Water level alarm	X	X	X	X	X				
Water pressure (feature can be purchased separately)	X	X	X	X	X				
Flushing (feature can be purchased separately)	X	X	X	X	X				
Water temperature monitoring (optional for flushing)	X	X	X	X	X				
Bird scale									
Scales	2	2	2	2	12	12	12	4	12
Scale associated with animal group					X		X	X	X
Manual registration of weight	X	X	X	X	X				
Inspection weight	X	X	X	X	X				
Light									
Light	X	X	X	X	X				
Light dimmer	X	X	X	X	X				
Light program	X	X	X	X	X				
Main light, standard	X	X	X	X	X				
Main light, flexible	X	X	X	X	X				
Follower light	3	3	3	3	3		6	6	9
Extra light	2	2	2	2	2		2	4	6
Light sensor	1	1	1	1	1	5	5	4	5
Boost function	X	X	X	X	X				
Inspection light					X	X	X	X	X
Light dimmer controlled by light sensor					X	X	X	X	X
Light color					X		X	X	X
Changing light intensity	X	X	X	X	X				
Nest control									
Nest control					X		X	X	X
Controlling scratching area									
Controlling scratching area					X		X	X	X

	BlueControl system software					BlueControl add-on software			
Software variant	**LPV**	**CT**	**T**	**Nat.**	**Breeder**	**Broiler**	**Breeder**	**Layer M**	**Layer L**
24-hour clock									
24-hour clocks	**4**	**4**	**4**	**4**	**10**	**10**	**10**	**8**	**10**
Egg counter									
Egg counter					32		**32**	**8**	**32**
Egg counter positioning input terminals								**6**	**8**
Egg grading								**X**	**X**
Egg weight					**X**		**X**	**X**	**X**
Miscellaneous									
Number of houses per controller	**1**	**1**	**1**	**1**	**1**				
User-defined inputs					**6**		**6**	**6**	**6**
Interval timers					**6**		**6**	**6**	**6**
Aux. sensor	**8**	**8**	**8**	**4**					
Reference values	**X**	**X**	**X**	**X**	**X**				
Key values					**X**	**X**	**X**	**X**	**X**
Curve control (temp., humidity, min. vent, max. vent.)	**X**	**X**	**X**	**X**					
History curves	**X**	**X**	**X**	**X**	**X**				
In-between function (soaking/washing/drying/disinfection)	**X**	**X**	**X**	**X**					
Catching	**X**	**X**	**X**		**X**				
Ventilation boost	**X**	**X**	**X**	**X**					
User-defined report view	**X**	**X**	**X**	**X**	**X**				
Frost protection of empty section	**X**	**X**	**X**	**X**					
Three password levels	**X**	**X**	**X**	**X**	**X**				
Comprehensive alarm functions	**X**	**X**	**X**	**X**	**X**				
Operation and alarm logs	**X**	**X**	**X**	**X**	**X**				
Support of emergency opening **DOL 278T**	**X**	**X**		**X**					
Pulse measurement of energy consumption	**8**	**8**	**8**	**8**	**8**				
Status on equipment (current sensor)	**64**	**64**	**64**	**64**	**64**				
Remote Access (via **FarmOnline**)	**X**	**X**	**X**	**X**	**X**				

* Only for production of broilers in houses with floor management.

1.4 Functionality Mini Poultry

	BlueControl Mini Poultry		
System software	**LPV**	**T**	**Nat.**
Ventilation systems			
LPV	X		
LPV chill	X		
Tunnel		X	X
Natural			X
Ventilation and temperature			
Inside temperature sensor	2	2	2
Outside temperature sensor	X	X	X
Side inlet	2		
Tunnel inlet		2	
Natural inlet			4
MultiStep	2	8	
Dynamic MultiStep		X	
Adaptive ventilation	X	X	X
PID control (or P-band)	X	X	X
Minimum ventilation in % and m^3/animal	X	X	
Minimum ventilation in %			X
Reduced minimum ventilation (according to outside temperature)	X	X	X
Number of stepless groups controlled separately	1	1	
Number of flaps in each stepless group	1	1	
Cycle timer minimum side ventilation	X		
Cycle timer minimum tunnel ventilation		X	
Comfort control	X		
Heat wave comfort control (batch production)	X		
Day and night adjustment	X		
De-ice function for inlets	X		
Extra ventilation	X		
Stir fan	2	4	2
FreeRange	X		
Pop holes	2		
Display of user offset for temperature setpoint	X	X	X
Heating			
House heaters. Number of units	2	2	2
Adaptive control	X	X	X
Humidity			
Inside humidity sensor	X	X	X
Outside humidity sensor	X	X	X
Humidity control via "humidity ventilation”	X	X	
Humidity control via “temperature reduction”	X	X	X

	BlueControl Mini Poultry		
System software	**LPV**	**T**	**Nat.**
Humidity control via "heating control”	X	X	
Humidification control	X		
Adaptive humidity control	X	X	X
Intelligent humidity control by outdoor conditions			X
Automatic change of humidity control principle on day number	X	X	X
Cooling			
Side cooling	1		1
Tunnel cooling		2	
Adaptive tunnel cooling		X	
Cooling pad cleaning function		X	
Nozzle cleaning (side cooling)	X		
Use effect curve		X	
Production			
Feed			
See table for feed weighers available for different feed systems.			
Electronic silo weigher	1	1	1
Electronic silo weigher common auger	1	1	1
Time-controlled weigher	1	1	1
Time-controlled weigher with cross auger	1	1	1
Manual entry	X	X	X
Feed counter	X	X	X
Silos	2	2	2
Naming of silos	X	X	X
Shared silo via LAN	X	X	X
Feed control			
Pan feeding	X	X	X
Naming of feed types	X	X	X
Automatic silo change to silo with the same feed type	X	X	X
Empty silo sensor	X	X	X
Control according to light program	X	X	X
Water			
Water meter	1	2	1
Naming of water meter	X	X	X
Water program	X	X	X
Control according to light program	X	X	X
Stop relay for water consumption	X	X	X
Flushing (water line)	0	2	0
Bird scale			
Scales	2	2	2
Manual registration of weight	X	X	X

	BlueControl Mini Poultry		
System software	**LPV**	**T**	**Nat.**
Inspection weight	X	X	X
Light			
Light dimmer	X	X	X
Light program	X	X	X
Main light, standard	X	X	X
Follower light	2	2	2
Light intensity curve	X	X	X
24-hour clock			
24-hour clocks	2	2	2
Miscellaneous			
Number of houses per controller	1	1	1
User-defined inputs			
Reference values	X	X	X
Curve control (temp., humidity, min. vent, max. vent.)	X	X	X
History curves	X	X	X
Pause functions (washing / drying / disinfection)	X	X	X
User-defined report view	X	X	X
Frost protection of empty section	X	X	X
Three password levels	X	X	X
Comprehensive alarm functions	X	X	X
Operation and alarm logs	X	X	X
Support of emergency opening DOL 278T	X		X
Remote Access (via FarmOnline)	X	X	X

Page views

The controller has a number of pages which contain exactly the functions and values that are needed in the daily work.

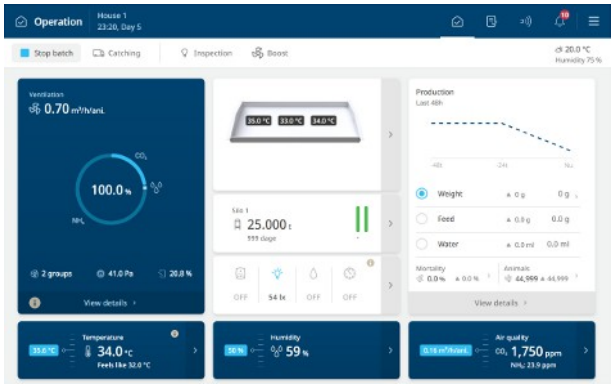

Climate control

Dynamic setpoint continuously takes into account both the current ventilation and the settings you make. It will thus adapt so that there is always the optimum temperature at the given level of ventilation.

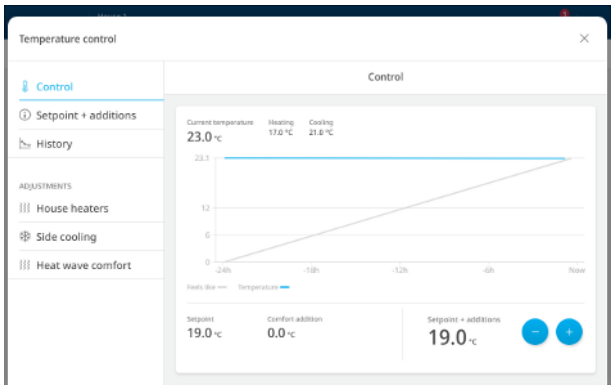

Password

Each user level can be protected against unauthorised changes with a password.

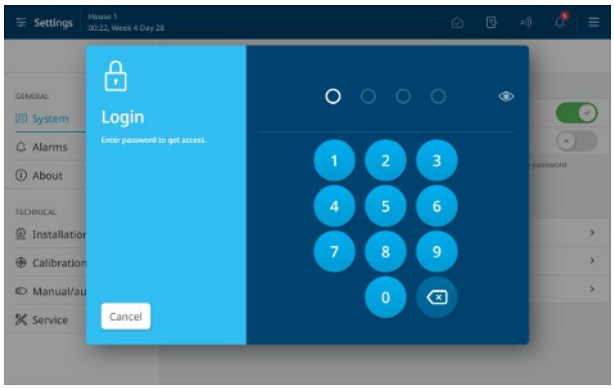

USB stick/SD card

Using a USB stick enables you to copy the current setting of the controller. This way it is possible to save a backup copy of the setup and also to copy the setup to other controllers.

It is also possible to make a backup of historic data on the SD card.

Safety

- Three access user levels requiring password
- Comprehensive alarm functions
- Operation and alarm logs
- Emergency opening as the standard function

FarmOnline+

Using the FarmOnline+ management system, the producer can access the controllers' data and setup from any PC with an internet connection and from the system's mobile app.

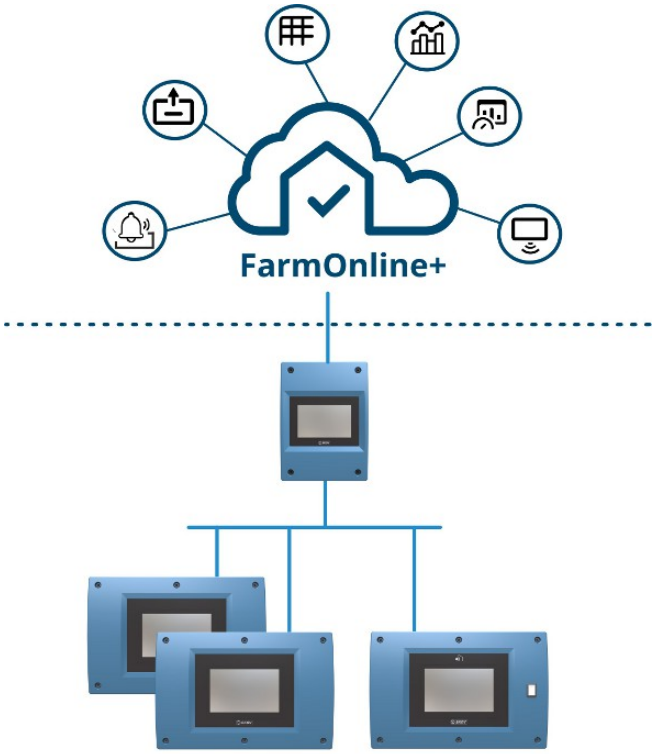

Remote Access

The function Remote Access enables FarmOnline+ direct access to operate the controller, which can be operated as if you were standing right next to it. Therefore, the function will also facilitate service access to the controllers in connection with troubleshooting and other support.

2 Product survey

A BlueControl poultry controller consists of a number hardware variants. They can be freely combined with the desired software functionality for climate and production.

The BlueControl poultry climate software includes a number of standard production functions. The more advanced functions such as feed control is available in variants of add-on software for broilers, breeders and layers respectively.

In addition, a variant with limited functionality is available. BlueControl Mini Poultry with a 7” display and either LPV, Tunnel, or Natural ventilation.

2.1 Hardware

The standard hardware has a 10" display.

It contains a main module with 12 relays and 0-10 V inputs and outputs, which can be configured as follows:

- 11 inputs and 2 output - or
- 9 inputs and 4 output - or
- 7 inputs and 6 outputs

In addition, it can contain a number of I/O modules type 3. The number of inputs and outputs and relays on the I/O module is described below for each variant.

	136750 BlueControl HW, 10" 12RL 0-10 V input or 0-10 V output (2+2) 0-10 V input or DOL 12 input or digital input (4) 0-10 V input or digital input (2) 0-10 V output (2) Relays (12) Temperature sensors must be ordered separately. No documentation is supplied with the controller. Manual packages must be ordered separately in the relevant language.
	136751 BlueControl HW, 10" 12RL w/sp. Speed controller (w/sp.) (2) 0-10 V input or 0-10 V output (2+2) 0-10 V input or DOL 12 input or digital input (4) 0-10 V input or digital input (2) 0-10 V output (2) Relays (12) Temperature sensors must be ordered separately. No documentation is supplied with the controller. Manual packages must be ordered separately in the relevant language.
	136752 BlueControl HW, 10" 22RL 0-10 V input or 0-10 V output (2+2) 0-10 V input or DOL 12 input or digital input (12) 0-10 V input or digital input (2) 0-10 V output (10) Relays (22) Temperature sensors must be ordered separately. No documentation is supplied with the controller. Manual packages must be ordered separately in the relevant language.

136753 BlueControl HW, 10" 22RL w/sp.

Speed controller (w/sp.) (2)

0-10 V input or 0-10 V output (2+2)
0-10 V input or DOL 12 input or digital input (12)
0-10 V input or digital input (2)
0-10 V output (10)
Relays (22)

Temperature sensors must be ordered separately.

No documentation is supplied with the controller. Manual packages must be ordered separately in the relevant language.

136754 BlueControl HW, 10" 32RL

0-10 V input or 0-10 V output (2+2)
0-10 V input or DOL 12 input or digital input (20)
0-10 V input or digital input (2)
0-10 V output (18)
Relays (32)

Temperature sensors must be ordered separately.

No documentation is supplied with the controller. Manual packages must be ordered separately in the relevant language.

136755 BlueControl HW, 10" 32RL w/sp.

Speed controller (w/sp.) (2)

0-10 V input or 0-10 V output (2+2)
0-10 V input or DOL 12 input or digital input (20)
0-10 V input or digital input (2)
0-10 V output (18)
Relays (32)

Temperature sensors must be ordered separately.

No documentation is supplied with the controller. Manual packages must be ordered separately in the relevant language.

136757 BlueControl HW, 10" wiring box 22RL

0-10 V input or 0-10 V output (2+2)
0-10 V input or DOL 12 input or digital input (12)
0-10 V input or digital input (2)
0-10 V output (10)
Relays (22)

Temperature sensors must be ordered separately.

Speed controller kit for wiring box (136763) must be ordered separately.

No documentation is supplied with the controller. Manual packages must be ordered separately in the relevant language.

136758 BlueControl HW, 10" wiring box 32RL

0-10 V input or 0-10 V output (2+2)
0-10 V input or DOL 12 input or digital input (20)
0-10 V input or digital input (2)
0-10 V output (18)
Relays (32)
Set for installation in more levels (1)

Temperature sensors must be ordered separately.

Speed controller kit for wiring box (136763) must be ordered separately.

No documentation is supplied with the controller. Manual packages must be ordered separately in the relevant language.

136759 BlueControl HW, 10" wiring box 42RL

0-10 V input or 0-10 V output (2+2)
0-10 V input or DOL 12 input or digital input (28)
0-10 V input or digital input (2)
0-10 V output (26)
Relays (42)
Set for installation in more levels (1)

Temperature sensors must be ordered separately.

Speed controller kit for wiring box (136763) must be ordered separately.

No documentation is supplied with the controller. Manual packages must be ordered separately in the relevant language.

2.2 Software

BlueControl poultry is available as a one house controller.

Software is available in different versions:

- Stand-alone software with climate functionality, e.g. LPV (side), Combi-Tunnel, Tunnel or Natural. The software also contains limited production functionality.
- Add-on software with production functionality, e.g. broiler, breeder or lay Cannot be installed alone.
- Feature software: Can only be installed together with stand-alone software with add-on software. Cannot be installed alone.

136742 BlueControl poultry SW, LPV+Production

Software for LPV ventilation.

136741 BlueControl poultry SW, CT+Production

Software for Combi-Tunnel ventilation.

Supplied with a DOL 10 temperature sensor, which is used as a tunnel cooling sensor.

136744 BlueControl poultry SW, Tunnel+Production

Software for Tunnel ventilation.

Supplied with a DOL 10 temperature sensor, which is used as a tunnel cooling sensor.

	136743 BlueControl poultry SW, Natural+Production Software for natural ventilation.
	136766 BlueControl broiler SW, add-on Add-on software for production of broilers.
	136767 BlueControl breeder SW Software for the production of breeders. Can be used with climate software or as stand-alone with production functionality only. Also used when upgrading older stand-alone production controllers (software version 7.x).
	136768 BlueControl layer-L SW, add-on Feed groups: 12. Water meters: 24. Egg counters: 32. **136769 BlueControl layer-M SW, add-on** Feed groups: 4. Water meters: 8. Egg counters: 8. Add-on software for layers.

2.2.1 Feature software

	136797 BlueControl, water flushing, feature SW Flushing is a software feature used for flushing the water system with water under high pressure. The aim is to remove impurities and bacteria that can accumulate in the system. It is used in poultry houses where up to 30 water lines can be flushed in turn. Can be used together with Breeder, Broiler or Layer add-on software. When loading the feature software, new functions are added to the menus of the controller. Feature software can be installed in controllers with version 6.5 software or higher. If the controller software version is older than version 6.5, it requires update to the latest version before installing the feature software. In addition to flushing, a DOL 10 kit (140304) can be used to monitor water temperature in the water line. It is supplied with English documentation.
	136798 BlueControl water pressure, feature SW Water pressure is a software function that is used to regulate the pressure in the water system when there is a need for a higher or lower pressure during the day. The primary purpose is to ensure sufficient water pressure when the animals drink a lot, just after the light is turned on, and just before the light is turned off. Can be used together with Breeder, Broiler and Layer add-on software. When loading the feature software, new functions are added to the menus of the controller. Water pressure requires both that light and a light program is applied. Feature software can be installed in controllers with software version 7.0 or higher. If the controller software version is older than version 7.0, it requires update to the latest version before installing the feature software. It is supplied with English documentation.

136799 BlueControl BinTrac, feature SW

BinTrac is a feature for after-installation in a controller with production system software. When loading the feature software, new functions are added to the menus of the controller.

Feature software can be installed on production controllers with version 7.3 software or higher. If the controller software version is older than version 7.3, it requires update to the latest version before installing the feature software.

From version 8.0 it can be installed on all variants of the controller.

It is supplied with English documentation.

439304 DA 4200 SmartHeat kit DN 25

DA 4200 SmartHeat kit is an add-on that includes a flow sensor and a software extension of the controller. SmartHeat kit is used together with DA 4200 room heating/floor heating units DN 25.

After updating and mounting of a flow sensor, the controller can measure water flow and flow and return temperatures to a house/section. Based on these recordings, the controller and FarmOnline can calculate and record the instantaneous heat consumption in kilowatts (kW) and the number of used kilowatt-hours (kWh) for the current house/section.

The controller generates an alarm if the water flow is too low and if the flow temperature is too low.

The kit includes flow sensor and USB stick with SmartHeat software.

The SmartHeat software can only be installed on controllers with software version 8.0 or later.

439305 DA 4200 SmartHeat kit DN 32

DA 4200 SmartHeat kit is an add-on that includes a flow sensor and a software extension of the controller. SmartHeat kit is used together with DA 4200 room heating/floor heating units DN 32.

After updating and mounting of a flow sensor, the controller can measure water flow and flow and return temperatures to a house/section. Based on these recordings, the controller and FarmOnline can calculate and record the instantaneous heat consumption in kilowatts (kW) and the number of used kilowatt-hours (kWh) for the current house/section.

The controller generates an alarm if the water flow is too low and if the flow temperature is too low.

The kit includes flow sensor and USB stick with SmartHeat software.

The SmartHeat software can only be installed on controllers with software version 8.0 or later.

2.3 Hardware and software

136196 BlueControl Mini

7” display
2.1 A power supply
1 x DOL 10 (only used for tunnel cooling with tunnel variant)

0-10 V input or 0-10 V output (2+2)
0-10 V input or DOL 12 input (4)
0-10 V input (2)
0-10 V output (2)
Relays (12)

Is supplied with BlueControl Mini software with LPV ventilation, Tunnel ventilation, and Natural ventilation. Cannot be combined with feature software.

Temperature sensors for inside and outside temperature recording must be ordered separately.

No documentation is supplied with the controller. Manual packages must be ordered separately in the relevant language.

2.4 Language

137250 BlueControl poultry manual package DA

137251 BlueControl poultry manual package EN

137266 BlueControl poultry manual package EN (US units)

137252 BlueControl poultry manual package DE

137253 BlueControl poultry manual package NL

137254 BlueControl poultry manual package FR

137255 BlueControl poultry manual package ES

137257 BlueControl poultry manual package SV

137259 BlueControl poultry manual package CS

137260 BlueControl poultry manual package PL

137261 BlueControl poultry manual package RU

137262 BlueControl poultry manual package HU

137263 BlueControl poultry manual package IT

137269 BlueControl poultry manual package JA

137270 BlueControl poultry manual package TH

137271 BlueControl poultry manual package ZH

137273 BlueControl poultry manual package PT

Manual packages with climate and standard production manuals.

137200 BlueControl broiler add-on manual package DA
137201 BlueControl broiler add-on manual package EN
137216 BlueControl broiler add-on manual package EN (US units)
137202 BlueControl broiler add-on manual package DE
137203 BlueControl broiler add-on manual package NL
137204 BlueControl broiler add-on manual package FR
137205 BlueControl broiler add-on manual package ES
137207 BlueControl broiler add-on manual package SV
137209 BlueControl broiler add-on manual package CS
137210 BlueControl broiler add-on manual package PL
137211 BlueControl broiler add-on manual package RU
137212 BlueControl broiler add-on manual package HU
137220 BlueControl broiler add-on manual package TH
137221 BlueControl broiler add-on manual package ZH

137850 BlueControl breeder stand-alone manual package DA
137851 BlueControl breeder stand-alone manual package EN
137852 BlueControl breeder stand-alone manual package DE

Manual packages for breeder production without climate functionality.

To be used with BlueControl breeder SW (136767).

137240 BlueControl breeder add-on manual package DA
137241 BlueControl breeder add-on manual package EN
137616 BlueControl breeder add-on manual package EN (US units)
137242 BlueControl breeder add-on manual package DE
137244 BlueControl breeder add-on manual package FR
137245 BlueControl breeder add-on manual package ES
137610 BlueControl breeder add-on manual package PL
137611 BlueControl breeder add-on manual package RU
137621 BlueControl breeder add-on manual package ZH
137623 BlueControl breeder add-on manual package PT

130000 BlueControl layer add-on manual package DA
130001 BlueControl layer add-on manual package EN
137766 BlueControl layer add-on manual package EN (US units)
130002 BlueControl layer add-on manual package DE
137764 BlueControl layer add-on manual package FR
137765 BlueControl layer add-on manual package ES

	137810 BlueControl Mini Poultry manual package DA **137811 BlueControl Mini Poultry manual package EN** **137812 BlueControl Mini Poultry manual package DE** **137813 BlueControl Mini Poultry manual package FR** **137814 BlueControl Mini Poultry manual package ES** **137815 BlueControl Mini Poultry manual package IT** **137816 BlueControl Mini Poultry manual package TH** **137817 BlueControl Mini Poultry manual package PT** **137818 BlueControl Mini Poultry manual package ID** **137819 BlueControl Mini Poultry manual package AR** The manual package contains user documentation in the selected language and technical manuals in English. Some manual packages include the technical documentation in the selected language.		
Language in the controller display	Danish English German Dutch French Spanish Finnish Swedish Norwegian Czech Polish Russian Hungarian	Romanian Slovenian Croatian Turkish Japanese Thai Chinese Chinese (traditional) Serbian Estonian Portuguese Indonesian Korean	Farsi Arabic Albanian Bulgarian Vietnamese Urdu Khmer Icelandic Ukrainian Greek Lithuanian Bengali Uzbek

2.5 Accessories

140252 DOL 114 humidity and temperature sensor, 2 m cable

140253 DOL 114 humidity and temperature sensor, 5 m cable

The DOL 114 is a dual-purpose temperature and humidity sensor that can be used to regulate the livestock house relative air humidity and temperature.

The DOL 114 is a high-quality sensor which is especially useful under particularly harsh conditions and in areas of high air humidity.

The DOL 114 comes with a protective cap.

In general, SKOV A/S recommends that a humidity sensor be installed in livestock houses integrating heat supply.

Climate controllers on the same LAN network can share an outside humidity sensor.

140263 DOL 104 humidity sensor 0-10 V

DOL 104 is a high-precision humidity sensor that can be used for regulating the relative air humidity in the livestock house.

The DOL 104 is a high-quality sensor which is especially useful under particularly harsh conditions and in areas of high air humidity.

DOL 104 has full protection against short circuits and wiring failures.

The DOL 104 comes with a protective cap.

If you want humidity and temperature measurement on two individual sensors DOL 104 can i.a. be used.

In general, SKOV A/S recommends that a humidity sensor be installed in livestock houses integrating heat supply.

140200 DOL 12 temperature sensor, 1.4 m cable

140210 DOL 12 temperature sensor, 5 m cable

The temperature sensor can be used both outside and inside.

Order the required number of sensors for registration of inside temperature and outside temperature.

In large houses, up to eight extra temperature sensors can be connected, resulting in an average measurement by several sensors per zone.

When using pad cooling, order additional DOL 12 sensors if an alarm is required for no cooling at pads - e.g. one per pump.

140246 DOL 10 temperature sensor

Used as pad cooling sensor in tunnel and combi-tunnel systems.

140304 DOL 10 kit for water temperature

Is used together with the software function water flushing (136797) for measuring water temperature in the water line.

The kit contains:

- 1 DOL 10 temperature sensor with 5 m cable and rubber case.
- 1 6.5 mm drill
- 1 tube of silicone glue
- 2 cable ties
- 1 Technical user guide

140245 Radiation shield for climate sensors

Used in Combi-Tunnel ventilation systems in order to ensure a proper switch between side and tunnel ventilation.

Used in natural ventilation to ensure correct regulation.

The radiation shield protects an outside temperature and/or humidity sensor from rain and radiant heat.

We recommend that the radiation shield is positioned 2 m above the roof. Alternatively 2 m above the ground and 2 m from other building elements (walls etc.)

The radiation shield is supplied with a mounting bracket.

It may be necessary to order a climate sensor with a long cable when using the radiation shield.

140331 DOL 119 CO2 sensor 5000/10000 ppm

Sensor for measuring the CO2 content in the air.

Registration of the CO2 content of the air allows the controller to regulate the minimum ventilation.

If a CO2 sensor has not been installed, the controller regulates the minimum ventilation on the basis of the set values (m3/h per animal).

Supplied with a M12 plug and sealing plug as well as protection cap for DOL 119.

140247 DOL 53 ammonia sensor

140236 DOL 53 dust filter (5 pcs)

DOL 53 measures the ammonia in the house's air.

Can be used for registration and control of ammonia levels in the air.

140268 DOL 16 light sensor 0-100/1000LUX 0-10V

Output 1: 0-100 lux. Output 2: 0-1000 lux.

140270 DOL 16 light sensor 0-50/1000LUX 0-10V

Output 1: 0-50 lux. Output 2: 0-1000 lux.

The sensor can be used to measure the light intensity for main light and slave light, respectively.

Select the type of sensor that corresponds to the required light intensity in the livestock house.

Sensor with fixed cable.

140266 DOL 16 light sensor 0-100/1000LUX 0-10V M12

Output 1: 0-100 lux. Output 2: 0-1000 lux.

The sensor can be used for measuring light intensity.

Select the type of sensor that corresponds to the current brightness in the livestock house (measuring area).

Sensor with M12 connector/cable.

This sensor can be dismounted during cleaning and disinfection of the house.

140269 Cable 2 m M12 plug incl. sealing plug

2 meter cable for DOL 119/DOL 16 with M12 plug and sealing plug.

When replacing DOL 19 with DOL 119, the cable must be replaced or the connection must be moved.

380101 Bracket for DOL 16/104/114

Mounting brackets are used if the sensor is to be mounted in an accurate position.

140333 DOL 18 v2 elec. sub-pressure sensor 100 Pa

140334 DOL 18 v2 elec. sub-pressure sensor 300 Pa

Sensor for measuring the pressure level.

The electronic pressure sensor facilitates active pressure control. Based on the measured pressure, the controller regulates the air inlets so the required pressure is maintained.

DOL 18 hose set must be ordered separately.

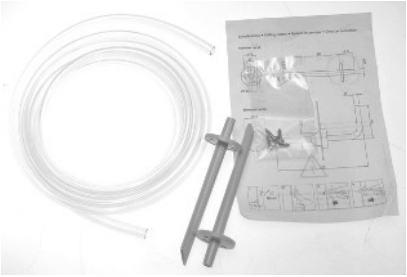

140235 DOL 18 hose set

Hose set for DOL 18 electronic sub-pressure sensor.

Supplied with 2 m plastic hose, 2 static pressure tip with flange and screws.

300085 Transparent plastic hose ø7x5

To be used if additional plastic hose is needed.

Ordered by the meter.

437672 Extension nipple & 5/7 PVC tube set

Extension nipples must be ordered if another hose type than 300085/140235 is used.

140232 DOL 58 weather sensor

The DOL 58 measures wind direction, wind speed and air pressure/temperature (optional). Wind speed and direction are measured using ultrasound.

Can be used as an extra sensor.

413232 House board

For mounting of climate sensors.

100609 DOL 44R capacitive sensor 10-30V AC/DC

100610 DOL 44R capacitive sensor, 90-265V AC

Capacitive sensor for use inside containers - e.g., with grain, feed, and granules.

Setting via trimmer.

100651 DOL 45R capacitive sensor

Capacitive sensor for use inside containers - e.g., with grain, feed, and granules.

Setting via push buttons.

140107 Plastic gland for DOL 40 series

Screwed flanges are the easiest way of mounting capacitive sensors

130181 DOL 100 Water 81 box

130182 DOL 100 Water 16l box

External I/O box for connection of water level sensors.

The DOL 100 converts the signal from the water level sensor into digital signals and transmits them to the controller using CAN bus communication.

The standard software/hardware of the BlueControl poseries supports 13 I/O modules in total. DOL 100 counts as one module.

Water input terminals: 8 or 16

Is used with the CAN bus module (132245) and a CAN bus cable (130121-130128).

130183 DOL 100 digital 8I box

130184 DOL 100 digital 16I box

130191 DOL 100 digital 24I box

130192 DOL 100 digital 32I box

External I/O box for connection of water meter, egg counter, or capacitive sensor.

The DOL 100 converts the signals into digital signals and transmits them to the production controller using CAN bus communication.

The standard software/hardware of the BlueControl series supports 13 I/O modules in total. DOL 100 counts as one module.

0-24 V inputs terminals: 8, 16, 24 or 32.

Is used with the CAN bus module (132245) and a CAN bus cable (130121-130128).

130195 DOL 100 I/O box 10 RL

130196 DOL 100 I/O box 20 RL

External I/O box to control the valves used for flushing.

DOL 100 I/O box contains 1 or 2 I/O modules type 3.

Relays: 10/20 x NO/NC potential free max.

The DOL 100 converts the signals into digital signals and transmits them to the controller using CAN bus communication.

The standard software/hardware of the BlueControl series supports 13 I/O modules in total. DOL 100 I/O box 10 RL counts for 1 module. DOL 100 I/O box 20 RL counts for 2 modules.

Is used with the CAN bus module (132245) and a CAN bus cable (130121-130128).

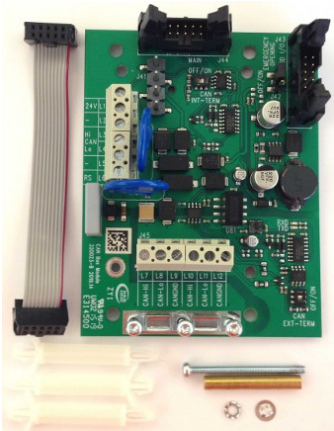

132245 CAN-bus module

Always use the CAN-bus module when using external CAN bus communication.

One for each controller.

130121 CAN bus cable 50 m
130125 CAN bus cable 100 m
130126 CAN bus cable 250 m

For indoor use.

Must be used with external units using CAN bus communication.

130123 CAN bus cable UV 50 m
130127 CAN bus cable UV 100 m
130128 CAN bus cable UV 250 m

For outdoor use.

Must be used with external units using CAN bus communication.

135752 Power supply 24V, 2.1A in box

An external power supply is used if the current consumption of the chosen 24 V components exceeds 0.8 A, as the maximum supply of the internal controller's power supply is 0.8 A.

Voltage 90–264 V
Frequency 47-63 Hz
Power 160 VA/80 W
Current 0.7 A

Output
Voltage 24 V +/- 10 %
Current 2.1 A

134718 Mini power backup unit, 20V 1A

The mini power backup unit is designed to be installed at the side of and connected to a controller.

The mini power backup unit safeguards the controller against disturbances from brief supply outage of supply-interruptions at 115 V / 230 V, where the controller would otherwise restart.

The mini power backup unit is typically used where there is no emergency opening.

To be connected to a controller only if:

- the controller has a maximum of 6 I/O modules *and*
- consumption from the main module does not exceed 0.4 A *and*
- consumption from the +24 V terminals of the loop module does not exceed 0.8 A.

Sequential restarting of fans
Can in the event of a power failure give an alarm signal to SKOV controllers that the fans are without power. The controller switches all MultiStep OFF and ensures a sequential restart when the power supply returns. This will ensure the power supply against overload.

Backup time
Average backup time: 5 minutes per hour
Maximum backup time: 0.5 – 3 hours with fully charged battery

136470 BlueControl extension box 10RL

Extension box with 1 pcs. I/O module, 10RL 8AI 8AO, type 3.

0-10 V input or DOL 12 input or digital input (8)
0-10 V outputs (8)
Relays (10)

Used when more I/O modules are needed than are available in the standard hardware.

The inputs can with a jumper be configured individually for either DOL 12, DI (digital input) for water meters or AI (analog input, 0-10 V).

Includes rubber sleeves and ribbon cable

The controller's standard software/hardware supports 13 I/O modules in total. BlueControl extension box 10RL counts for 1 module.

136471 BlueControl extension box 20RL

Extension box with 2 pcs. I/O module, 10RL 8AI 10RL, type 3.

0-10 V input or DOL 12 input or digital input (16)
0-10 V outputs (16)
Relays (20)

Used when more I/O modules are needed than are available in the standard hardware.

The inputs can with a jumper be configured individually for either DOL 12, DI (digital input) for water meters or AI (analog input, 0-10 V).

Includes rubber sleeves and ribbon cable

The controller's standard software/hardware supports 13 I/O modules in total. BlueControl extension box 20RL counts for 2 modules.

134731 Multipurpose housing blue 380 x 400

134732 Multipurpose housing blue 380 x 566

Box for placement of an extra I/O module.

There is room for 2 I/O modules in a small box.

There is room for 3 I/O modules in a large box.

Used together with I/O module (136659), ribbon cable (136508) and rubber sleeves (345425).

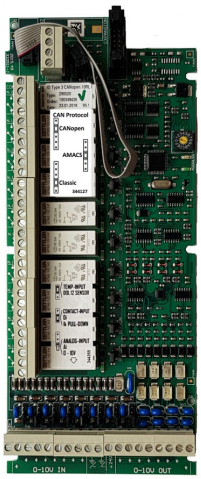

136659 IO type 3 CANopen 10RL 8AI 8AO

The controller's standard software/hardware supports 13 I/O modules in total.

There is room for the following number of I/O modules in the various cabinets:

Controller Small (1)
Controller Small w/sp. (0)
Controller Large (2)
Controller Large w/sp. (2)

If more I/O modules are needed, you can use xtension boxes (136470 with 10 relays and 136471 with 20 relays), or alternatively extra modules can be put in a multipurpose housing (134731 and 134732).

Relays (10)
0-10 V input or DOL 12 input or digital input (8)
0-10 V output (8)

The inputs can be configured individually for either DOL 12, DI (for water meters) or AI (0-10 V input).

When temperature-controlled emergency opening (DOL 278T) activates, you can use a jumper to configure which relays to interrupt.

Using a jumper, all 0-10 V inputs can be configured as either a DOL 12 input or a digital input.

134941 Set for installation in more levels

Used when two I/O modules are mounted above each other, or when the I/O module is mounted above the internal speed control.

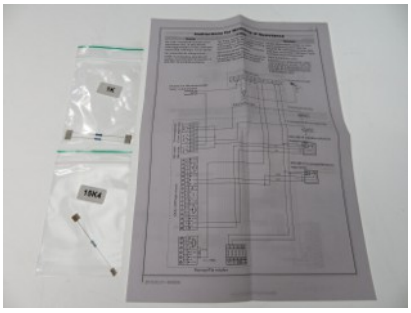

560098 Resistance set

Used for the following purposes:

- Series resistance (500 ohm) used when a 0-10 V input is used for a sensor 4-20 mA output.
- Resistor (15K ohm) is used for connection of the DOL 99B feed weigher.
- A Tranzorb diode for the protection of the relay when the relay activates a coil.

Order resistor sets if additional resistors are needed.

134703 M25 cable glands (30 pcs.)

Plastic gland and plastic nut for mounting in a controller or box.

Used when mounting cables in size ø7-14mm.

136763 Speed controller x2 kit for wiring box

Is used when a speed controller is desired for the BlueControl controller HW, wiring box.

136519 DOL WB mounting parts

Is used for connection of a extra I/O module in wiring boxes.

3 Technical data

Electrical			
Rated voltage	V AC	115*, 200* and 230/240 (*not speed controller)	
Operating voltage	V AC	103,5-264	
Frequency	Hz	50/60	
Output	W	75	
Max. current consumption	A	0.7	
RCD		To be installed in accordance with applicable laws and standards. RCCB can be used in front of the controller.	
Max. fuse in front of the controller	A	10	
Main module			
Configurable main module		Number of 0-10 V: -11 inputs and 2 outputs – or - 9 inputs and 4 outputs – or - 7 inpus and 6 outputs	
Inputs		7 x 0-10 V DC input impedance 2.1 MOhm.	
Pulsing Inputs (E.g., water meter, energy meter)		Minimum pulse length: 75 ms. Minimum pulse pause: 75 ms. Maximum frequency/pulse per sec.: 6 Hz.	
Outputs/power supply		2 x 15 V DC power supply +/- 10 % max. 40 mA in total.	
		2 x motor supply 24 V DC +/- 20 % max. 0.4 A (in total for the entire controller).	
		2 x supply for winch motor potentiometer 10 V DC max. 40 mA in total.	
		2 x 0-10 V DC. Output impedance 100 Ohm.	
Relays		12 x NO/NC potential free. Max. voltage/current at resistive load (**resistive load**) 250V AC / 5 A AC. Max. voltage/current at inductive load (**inductive load**) 250 V AC / 2 A AC CosPhi 0.8	
		1 x alarm relay NC, max. 24 V 2 A. Min. 12 V 10 mA (**resistive load**).	
I/O module type 3			
IO type 3, 10RL 8AI 8AO		With jumpers for configuration of inputs.	
Inputs		8 x 0-10 V DC input impedance 2.1 MOhm.	
Pulsing Inputs (E.g., water meter, energy meter)		Minimum pulse length: 75 ms. Minimum pulse pause: 75 ms. Maximum frequency/pulse per sec.: 6 Hz.	
Outputs/power supply		8 x 0-10 V DC output impedance 10 Ohm.	
		1 x motor supply 24V DC +/- 20% 0.4 A	
Relays		10 x NO/NC potential free max. Max. voltage/current at resistive load (**resistive load**) 250V AC / 5 A AC. Max. voltage/current at inductive load (**inductive load**) 250 V AC / 2 A AC CosPhi 0.8	
Network			
CPU-Type		**IMX8**	**IMX6**
Network interface		2 x 10/100/1000BASE-T RJ45	2 x 10/100 BASE+TX RJ 45

USB		2 x USB 3.0 Type-A.	2 x USB 2.0 Type-A.
LAN Network			
LAN cable		Minimum CAT5e STP	
LAN cable length	m	Maksimum100	
Speed	Mbps	Minimum100	
Delay	ms	Maximum 100	
Average delay	ms	<5	
Packet drop	%	<1	
Accessories			
Speed control (output)		Motor load max. 6.8 A 230-240 V AC/min. 150 W	
Environment			
Temperature, operation	°C	-10 to +45	
Temperature, storage	°C	-25 to +60	
Ambient humidity, operation	% RH	0-80	
Protection class	IP	54 (splashproof) It is assumed that the base surface is level, i.e. ≤ 1.5 mm height difference, and the front panel screws are tightened to a minimum of 1.5 Nm.	

Mechanical				
Cable knock-out punches		Large	Small	Mini
(for metrical cable glands)		30 x M25	20 x M25	4 x M25 10 x M20
Shipment				
		Large	Small	Mini
Dimensions (HxWxD)	mm	381x568x170	381x400x170	381x280x150
Dimensions crated HxWxD	mm	421x608x230	425x555x195	425x555x195
Weight	g	7800	5800	4500
Shipping weight	g	9200	6900	

3.1 Dimensioned sketch

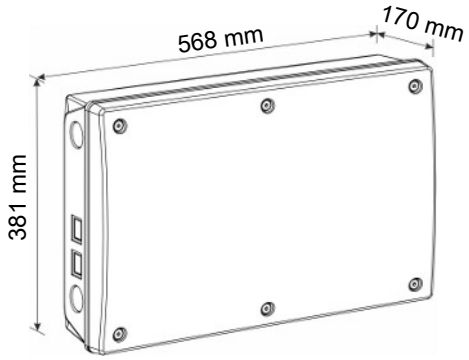

Figure 11: Large box

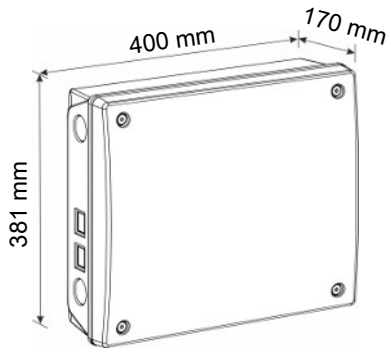

Figure 12: Small box

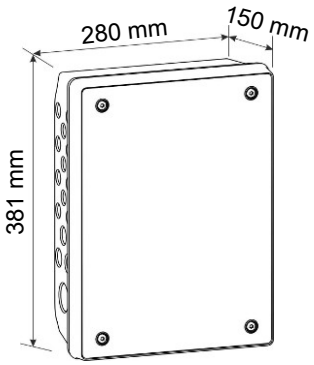

Figure 13: Mini box

3.2 Minimum requirements with shared equipment

Controllers that are connected to a common network (LAN) can share equipment such as sensors with each other. Thus, several controllers can receive registrations from one outside temperature sensor.

The controller can share:

- Outside temperature sensor
- Outside humidity sensor
- Weather station
- Feed weigher (9940, and electronic silo weigher)
- Silo

Sharing requires:

- A cabled LAN between the controller providing the shared equipment and the controller also using it.
- A stable network.
  If the FarmOnline+ management program is used on the farm, you can use the diagnostic tool in to check the stability of the network.

Specifications for LAN network	
Speed	100 Mbps
Delay	Maximum 100 ms
Average delay	<5 ms
Packet drop	<1%

3.3 Minimum requirements for a management system

From software version 9.3 of the controller, version 2.15 or higher is required.

TI • 2026-06-26 • en-US • Made in Denmark

Your partner for service

LAE Anlagenbau GmbH

Altenwalder Chaussee 94-100
D - 27472 Cuxhaven
GERMANY

TEL: +49 4721 105 0
FAX : + 49 4721 105 210
info@lae-cuxhaven.de
www.lae-cuxhaven.de

SKOV A/S • Hedelund 4 • Glyngøre • DK-7870 Roslev
Tel. +45 72 17 55 55 • www.skov.com • E-mail: skov@skov.dk